ANGLE GRINDER

G-1260,G-1510

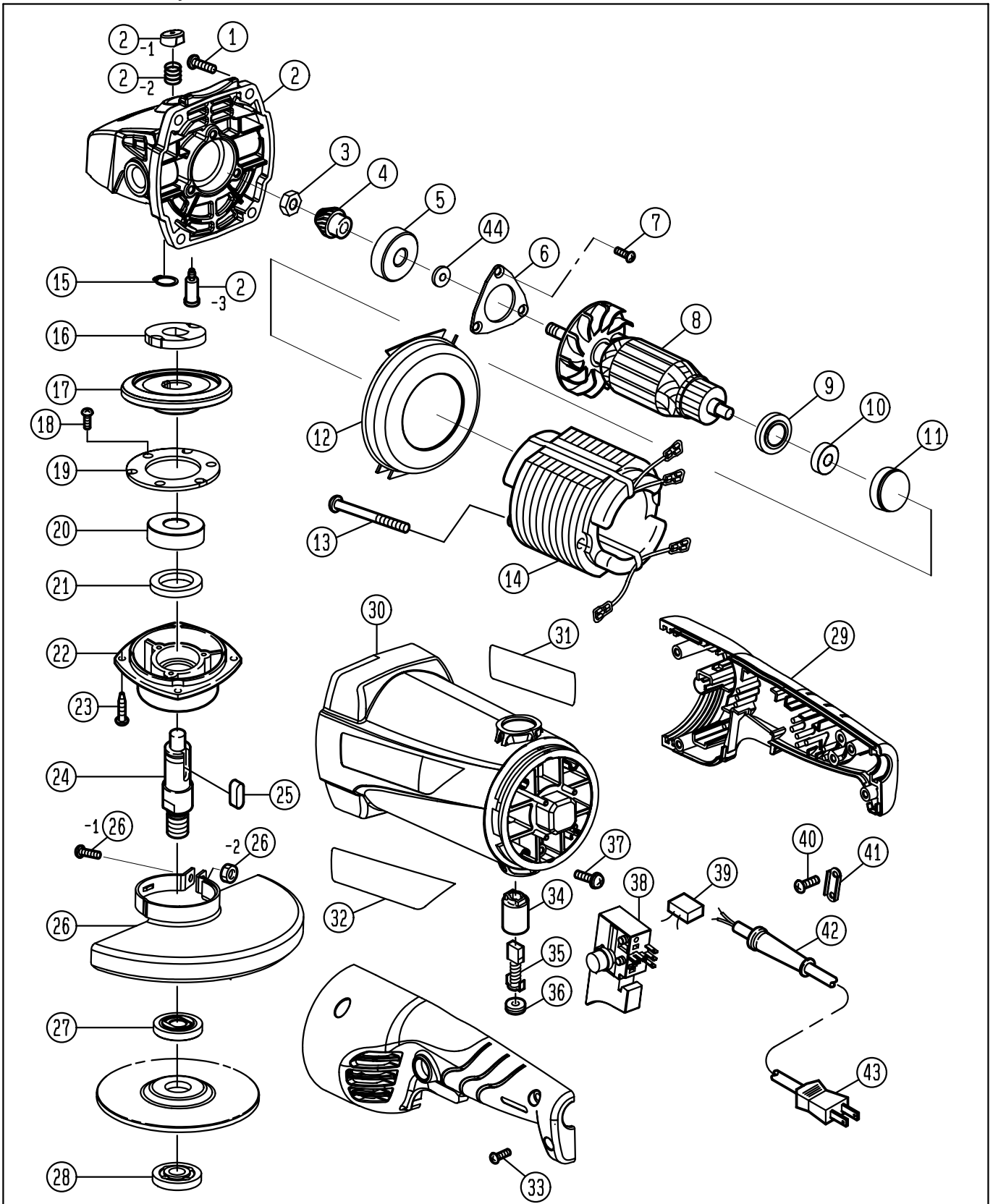

ANGLE GRINDER
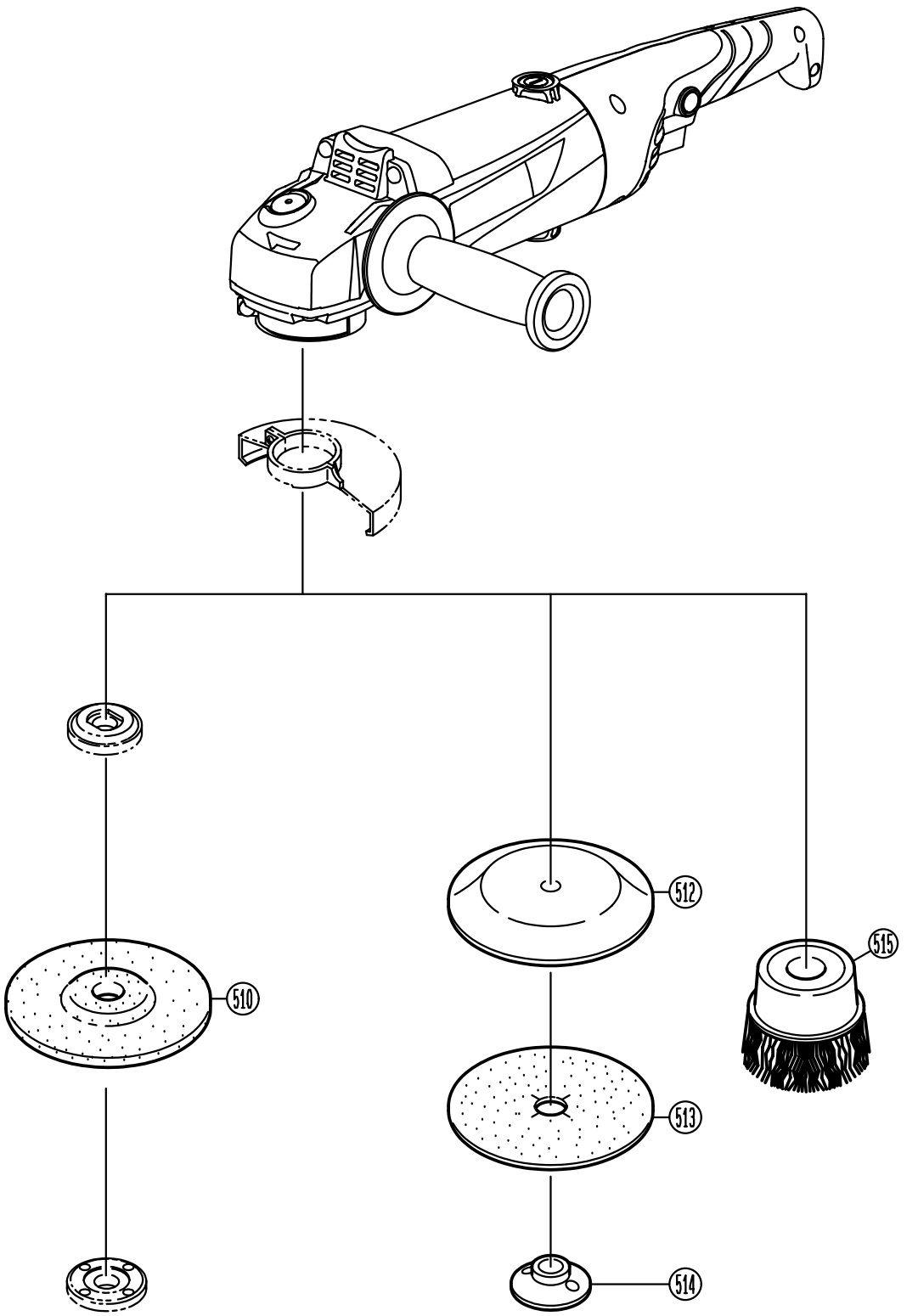
G-1260,G-1510